BILL NO. S-86-07-06

SPECIAL ORDINANCE NO. S-118-86

AN ORDINANCE approving City Utilities Purchase Order #A-53692 by the City of Fort Wayne, Indiana, by and through its Department of Purchasing and Lincolnway International Trucks, Inc., for the City Utilities Garage.

NOW, THEREFORE, BE IT ORDAINED BY THE COMMON COUNCIL OF THE CITY OF FORT WAYNE, INDIANA:

SECTION 1. That City Utilities Purchase Order #A-53692, between the City of Fort Wayne, by and through its City Utilities, and the Department of Purchasing with Lincolnway International Trucks, Inc., for the City Utilities Garage, respectfully for:

> the purchase of a 1986 Tandem Axle Cab & Chassis, per the specifications in reference #787 for the City Utilities Garage;

involving a total cost of Forty-Seven Thousand Fifty-Two and No/100 Dollars ($47,052.00), all as more particularly set forth in said Purchase Order and specifications, which are on file in the Office of the Department of Purchasing, and are by reference incorporated herein, made a part hereof, and are hereby in all things ratified, confirmed and approved, subject to financing through the City Equipment Lease program as provided for in Ordinance S-174-84.

SECTION 2. That this Ordinance shall be in full force and effect from and after its passage, and any and all necessary approval by the Mayor.

Councilmember

APPROVED AS TO FORM
AND LEGALITY

Bruce O. Boxberger

Bruce O. Boxberger, City Attorney

Read the first time in full and on motion by Burns seconded by Eisbart, and duly adopted, read the second time by title and referred to the Committee City Utilities (and the City Plan Commission for recommendation) and Public Hearing to be held after due legal notice, at the Council Chambers, City-County Building, Fort Wayne, Indiana, on _____, the _____ day of _____, 19____, at _____ o'clock ____.M.,E.

DATE: 7-8-86

Sandra E. Kennedy
SANDRA E. KENNEDY, CITY CLERK

Read the third time in full and on motion by Burns seconded by Eisbart, and duly adopted, placed on its passage. PASSED (~~LOST~~) by the following vote:

	AYES	NAYS	ABSTAINED	ABSENT	TO-WIT:
TOTAL VOTES	9				
BRADBURY	✓				
BURNS	✓				
EISBART	✓				
GiaQUINTA	✓				
HENRY	✓				
REDD	✓				
SCHMIDT	✓				
STIER	✓				
TALARICO	✓				

DATE: 7-22-86

Sandra E. Kennedy
SANDRA E. KENNEDY, CITY CLERK

Passed and adopted by the Common Council of the City of Fort Wayne, Indiana, as (~~ANNEXATION~~) (APPROPRIATION) (~~GENERAL~~) (SPECIAL) (~~ZONING~~ MAP) ORDINANCE (~~RESOLUTION~~) NO. S-118-86 on the 22nd day of July, 19 86,

ATTEST: (SEAL)

Sandra E. Kennedy
SANDRA E. KENNEDY, CITY CLERK

Samuel J. Talarico
PRESIDING OFFICER

Presented by me to the Mayor of the City of Fort Wayne, Indiana, on the 22nd day of July, 19 86, at the hour of 11:00 o'clock A.M.,E.S.T.

Sandra E. Kennedy
SANDRA E. KENNEDY, CITY CLERK

Approved and signed by me this 23rd day of July, 19 86, at the hour of 3:00 o'clock P.M.,E.S.T.

WIN MOSES, JR., MAYOR

Bid Reference #787
Open: May 20, 1986 at 11:15 A.M.
Tandem axle cab & chassis

Company Name	Price/Unit	Price/Unit w/Dump body	Del A.R.O.	As Specified
Ernst Truck		$8,003.80	not stated	X
Lincolnway Int'l	$40,135.00	+Deeds $47,052.00 +Hoosier $47,110.00 +Ernst $48,138.80	150 Days	X
Summit GMC/Ken		$49,099.00	not stated	X
Allen Co Mtr	$42,707.78	+W.A.Jones $49,704.78 +Deeds $49,534.78	not stated	11, Item 5,6,13,15: ✓1250 CCA Battery ✓Wedge Frt Brakes ✓3208 Turbo Cat/er 215 H.P. w/593 torque a/2200rp ✓Single Stage/air cleaner ✓Frame:26.osm; 110,00psi; 2,860,000rbm

2.
(Front Page)

CITY OF FORT WAYNE

DEPARTMENT OF PURCHASING
ONE MAIN STREET - ROOM 940
FORT WAYNE, INDIANA 46802

BID REFERENCE # 787

DATE April 28, 1986

DUE DATE Tuesday, May 20, 1986 at 11:15 A.M.

Department receiving bid items City Utilities Garage
1705 S. Lafayette Street
Fort Wayne, IN 46803

Bid Bond Required NO ____ YES X AMOUNT 5%

Performance Bond Required NO X YES ____ AMOUNT ____

Affirmative Action ON FILE ____ ATTACHED ____

Prompt payment discounts will be allowed as follows: 2 %
if paid within 10 days.

The City of Fort Wayne is exempt from Federal excise and Indiana State Sale Tax. The City's Indiana Sales Tax Exemption Certificate number is 356-001-255 0013, prices should not include these taxes.

The execution hereof by the bidder is acceptance of all terms and conditions herein and in that regard the bidder agrees to be bound by same and be bound to the amount of his/her bid for a period of sixty (60) days.

ERNST TRUCK EQUIPMENT
2727 McDonald St.
Fort Wayne, IN 46803-1595

Name of Company

by Kenneth B. Ernst-Mgr. Agent
(signature)

Address ERNST TRUCK EQUIPMENT
2727 McDonald St.

City Fort Wayne, IN 46803-1595

FORT WAYNE
WHERE AMERICA
WORKS

Grayarc
P.O. Box 2944
Hartford, CT 06104
CALL TOLL FREE: 1-800-243-5250

REPLY MESSAGE

Fold At (▲) To Fit Grayarc Window Envelope # EW10P

REORDER ITEM # F270

TO

Bid 787

FROM 1 - Unit

ERNST TRUCK EQUIPMENT
2727 McDonald St.
FORT WAYNE, INDIANA 46803
(219) 424-1590

~~84~~ ~~18~~ ~~102~~

244

SUBJECT: Perf

List DATE: 5-14-86

FOLD ▲

7 X 12 - 39" w/45" ends 10 yd 10 Ga.	2878.00		List 6610.00
8 Ga Floor.	185.00		
Box Top Rail	105.00	Ernst Cost Fact	
Vert & Horz Side Braces.	477.00		$3833.00
Tie Rail	108.00	Frt	125.00
Full Rear Corners	188.00	Profit	400.00
Continuous Weld (except floor to members)	96.00	Flaps	125.00
8 Ga 6 Panel Tailgate	81.00	Paint	400.00
24 Ton Frt tel chrome cyl 63105	2874.00	Mtg	650.00
less Hyd.	-(633.00)	~~Std~~ Lights	175.00
1/2 Cab	251.00		5708.00
		Undercoat	100.00
	$6610.00		$5808.80

PLEASE REPLY TO ⟶ SIGNED K B Crasch - Mgr.

REPLY

Central Hyd as per Bid w/ eqt + parts needed as per spec's JIC + Floor control divider etc. $2195.00

~~100 Gal Fuel Tank behind cab w/ mounting Unit Rackets $ [illegible]~~
~~Needs 18" clearance for 17" tank.~~

DATE: SIGNED Dual Steps

Item # F270 © Wheeler Group Inc. 1978

34. Dump Body/Hoist for Tandem Truck: Ten (10) cubic yard capacity with (Truck CT 96").

A) 12 foot in length
B) 7 foot in width
C) 39 inch sides
D) 45 inch front and tailgate

Body - Floor shall be 8 gauge steel, sides front, and cab shield shall be 10 gauge steel. Body will have boxed top rail, full corners, and 6" side braces both vertical and horizontal. Cab shield shall be reinforced and cover half the cab. Gussets will be added to accept side boards 2" X 8". Four inch structural channel cross members and structural channel longitudinals to suit the hoist. All welds will be continuous. Tarpulin tie bar shall be 3/4" minimum. All friction points are to be Alemite-Zerk fittings.

Tailgate - Double acting fully boxed 6 panel 8 gauge steel with heavy duty hardware.

Hoist - Minimum 24 ton capacity front mounted telescopic with chrome rod to be operated through central hydraulic system. Head shall be bolt or screw type.

Mud Flaps - Installed in front and rear of wheels.

Lights - To meet State and Federal requirements and specifications.

Painting - All metal shall be chemically cleaned before being primed. Units shall be polyamide Zinochromate and finish shall be Utility Blue in polyurethane enamel.

Bed shall be undercoated.

35. Warranty: Give description of all warranties and component warranties available.

* * * * *

Check if AS SPECIFIED:

1.____	9.____	17.____	25.____	33. Yes
2.____	10.____	18.____	26.____	34. Yes
3.____	11.____	19.____	27.____	35.____
4.____	12.____	20.____	28.____	
5.____	13.____	21.____	29.____	
6.____	14.____	22. Yes (Body)	30.____	
7.____	15.____	23.____	31.____	
8.____	16.____	24.____	32.____	

Total price for unit:

$ 8003.80

General Bid Form
Form Prescribed by State Board of Accounts
D. H. Goble Co., Greenfield, Indiana

Revised Form No. 95 (1964)

BID, OFFER OR PROPOSAL

on

MATERIAL OR MATERIALS, EQUIPMENT, GOODS OR SUPPLIES

Ft. Wayne, Indiana, May 16, 19 86

To Purchasing Dept., City of Ft. Wayne, Ind. 46802.
(State name official position and municipality)

Pursuant to notices given, the undersigned proposes to furnish the material or materials, equipment, goods or supplies as per said notices and specifications now on file in the office of Purchasing Dept., City of Ft. Wayne, Ft. Wayne, In. 46802
(state name / official position / and municipality)
and as per copy thereof, hereto attached, or as described herein for the following amounts:

(State the class or item number or an exact description of the material or materials, equipment, goods or supplies to be furnished and amount of bid on each article.)

Class or Item	Quantity	Unit	Quality — Description	Unit Price	Amount
	1		plus or minus - Perfection 244 7 x 12 dump body as per specs. (except not continuous weld floor to members) w/ lights, flaps, paint etc. installed. (See work sheet for breakdown)		
			ea.	$5808.80	
			(Also see work sheets & savings on lesser specs.)		
	1		plus or minus - Central hydraulic w/ JIC fittings, flow dividers and any necessary hydraulic eqt. as per specs.,		
			ea.	$2195.00	
			Total 1 unit	$8003.80	

Thank you.

K B Enoch

IF MORE SPACE IS NEEDED—ATTACH SEPARATE SHEET

2.
(Front Page)

CITY OF FORT WAYNE

DEPARTMENT OF PURCHASING
ONE MAIN STREET - ROOM 940
FORT WAYNE, INDIANA 46802

BID REFERENCE # 787

DATE April 28, 1986

DUE DATE Tuesday, May 20, 1986 at 11:15 A.M.

Department receiving bid items City Utilities Garage
1705 S. Lafayette Street
Fort Wayne, IN 46803

Bid Bond Required NO ____ YES X AMOUNT 5%

Performance Bond Required NO X YES ____ AMOUNT ____

Affirmative Action ON FILE X ATTACHED____

Prompt payment discounts will be allowed as follows: ____ %
if paid within ____ days.

The City of Fort Wayne is exempt from Federal excise and Indiana State Sale Tax. The City's Indiana Sales Tax Exemption Certificate number is 356-001-255 0013, prices should not include these taxes.

The execution hereof by the bidder is acceptance of all terms and conditions herein and in that regard the bidder agrees to be bound by same and be bound to the amount of his/her bid for a period of sixty (60) days.

ALLEN COUNTY MOTORS, INC
Name of Company

by Dennis W. Miller Agent
(signature)

Address ALLEN COUNTY MOTORS, INC.

City 2300 W. JEFFERSON STREET

FORT WAYNE, INDIANA 46804

FORT WAYNE WHERE AMERICA WORKS

General Bid Form
Form Prescribed by State Board of Accounts
D. H. Goble Co., Greenfield, Indiana

Revised Form No. 95 (1964)

BID, OFFER OR PROPOSAL

on

MATERIAL OR MATERIALS, EQUIPMENT, GOODS OR SUPPLIES

.....Indiana....., 19.....

To .....
State name official position and municipality

Pursuant to notices given, the undersigned proposes to furnish the material or materials, equipment, goods or supplies as per said notices and specifications now on file in the office of.....

.....
state name official position and municipality

and as per copy thereof, hereto attached, or as described herein for the following amounts:

(State the class or item number or an exact description of the material or materials, equipment, goods or supplies to be furnished and amount of bid on each article.)

Class or Item	Quantity	Unit	Quality — Description	Unit Price	Amount
Ref: 787			New 1986 Ford LT-8000 Tandem Chassis 1250 CCA Batteries - Wedge Frt. Brakes 3208 Turbo Caterpillar engine 215 H.P. w/593 Torque AT 2200 RPM Single Stage Air Cleaner Frame 26.0SM; 110,000 Psi; 2,860,000 RBM Chassis Warranty 12 months & 12,000 miles whichever occurs first Net Chassis price each unit	$	42,707.78
			for items #33, #34 see attached Quotes and add to Net chassis price		

IF MORE SPACE IS NEEDED—ATTACH SEPARATE SHEET

34. Dump Body/Hoist for Tandem Truck:

Ten (10) cubic yard capacity with (Truck CT 96").

A) 12 foot in length
B) 7 foot in width
C) 39 inch sides
D) 45 inch front and tailgate

Body - Floor shall be 8 gauge steel, sides front, and cab shield shall be 10 gauge steel. Body will have boxed top rail, full corners, and 6" side braces both vertical and horizontal. Cab shield shall be reinforced and cover half the cab. Gussets will be added to accept side boards 2" X 8". Four inch structural channel cross members and structural channel longitudinals to suit the hoist. All welds will be continuous. Tarpulin tie bar shall be 3/4" minimum. All friction points are to be Alemite-Zerk fittings.

Tailgate - Double acting fully boxed 6 panel 8 gauge steel with heavy duty hardware.

Hoist - Minimum 24 ton capacity front mounted telescopic with chrome rod to be operated through central hydraulic system. Head shall be bolt or screw type.

Mud Flaps - Installed in front and rear of wheels.

Lights - To meet State and Federal requirements and specifications.

Painting - All metal shall be chemically cleaned before being primed. Units shall be polyamide Zinochromate and finish shall be Utility Blue in polyurethane enamel.

Bed shall be undercoated.

35. Warranty: Give description of all warranties and component warranties available.

* * * * *

Check if AS SPECIFIED:

1. ✓	9. ✓	17. ✓	25. ✓	33. see ATTACHED
2. ✓	10. ✓	18. ✓	26. ✓	34. see ATTACHED
3. ✓	11.	19. ✓	27. ✓	35. ✓
4. ✓	12. ✓	20. ✓	28. ✓	
5. 1250CCA	13. Single	21. ✓	29. ✓	Chassis NET ONLY
6. Wedge FRT.	14. ✓	22. ✓	30. ✓	**Total price for unit:**
7. ✓	15.	23. ✓	31. ✓	$42,707.78
8. ✓	16. ✓	24. ✓	32. ✓	

W.A. JONES & SON

GATEWAY INDUSTRIAL PARK · P.O. BOX 450
COLUMBIA CITY, INDIANA 46725
219/244-7661

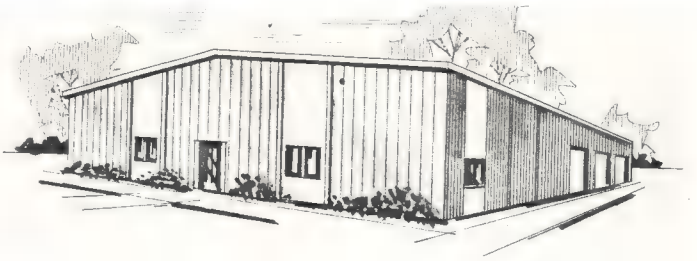

May 19, 1986

QUOTATION FOR CITY OF FORT WAYNE
Reference Bid No. 787

Item #33

Central hydraulic system to consist of pump capable of 25 GPM at 2000 PSI at normal truck engine speed mounted direct to front of engine. Gresen three bank hydraulic valve, flow divider #FCV51-75-30, 50GPM oil filter, 30 gallon oil tank and plumbing to make a complete system. Hook-up from the valve to individual pieces of equipment is to be the responsibility of those installing the equipment. All specifications listed will be met.

Installed price hydraulics $1,885.00

Item #34

Heil Dump Body 12ft. long, 7 ft. wide, 39 inch sides and 45 inch tailgate. Complete body shell to be 8 ga. steel, boxed top rail, 6" side braces horizontal & vertical. Cab shield to cover half of the roof(21" from body). Four inch structural cross members and structural long members, all continuous welds and 3/4" tarp tie bar. Tailgate to be six panel design and 8 ga. steel. Hoist is Heil Model 53-110 with 26.7 ton capacity. Flaps, lights, painting and undercoat to your specifications.

Installed price of body & hoist...$5,112.00

Bill Emmert May 19, 1986

NTEA
NATIONAL TRUCK EQUIPMENT ASSOCIATION
Member

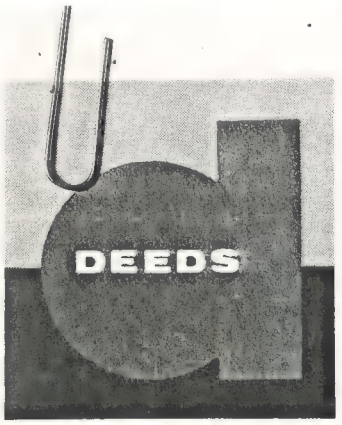

DEEDS

DEEDS EQUIPMENT COMPANY, INC.

CONSTRUCTION, MUNICIPAL, ROAD, & UTILITY EQUIPMENT

May 15, 1986

Allen County Motors
2300 West Jefferson Blvd.
Fort Wayne, IN 46804

Denny Miller:

Thank you for the opportunity to quote you the equipment for Fort Wayne, reference #787.

One (1) Galion, model 502 F, 12' dump body, 10-12 yard, 10 gauge, 8 gauge floor and tailgate, tailgate double-acting, Galion, model FD6392 hoist with chrome rod, one-half cab shield, mud flaps and lights to meet all City specifications, and painted to meet all City specifications.

One (1) Deeds, central hydraulic system, to meet all City specifications.

Price, FOB Fort Wayne, each.....$6,827.00

If you should have any questions concerning this quote, please feel free to call. Thank you.

Dan Brennan

Dan Brennan

Deeds Equipment Co., Inc.

DB/to

OFFICE: 8015 E. 45TH STREET • INDIANAPOLIS, IN 46226 • PHONE: (317) 545-3331
BRANCH: R.R. 2 • PLYMOUTH, IN 46563 • PHONE: (219) 784-2500

2.
(Front Page)

CITY OF FORT WAYNE

DEPARTMENT OF PURCHASING
ONE MAIN STREET - ROOM 940
FORT WAYNE, INDIANA 46802

BID REFERENCE # 787

DATE April 28, 1986

DUE DATE Tuesday, May 20, 1986 at 11:15 A.M.

Department receiving bid items City Utilities Garage
1705 S. Lafayette Street
Fort Wayne, IN 46803

Bid Bond Required NO ____ YES X AMOUNT 5%

Performance Bond Required NO X YES ____ AMOUNT ____

Affirmative Action ON FILE X ATTACHED ____

Prompt payment discounts will be allowed as follows: 0 %
if paid within 30 days.

The City of Fort Wayne is exempt from Federal excise and Indiana State Sale Tax. The City's Indiana Sales Tax Exemption Certificate number is 356-001-255 0013, prices should not include these taxes.

The execution hereof by the bidder is acceptance of all terms and conditions herein and in that regard the bidder agrees to be bound by same and be bound to the amount of his/her bid for a period of sixty (60) days.

Summit GMC/Kenworth, Inc
Name of Company

by Michael W. Mott Agent
(signature)

Address 5905 U.S. 30 East

City Fort Wayne, IND. 46803

FORT WAYNE WHERE AMERICA WORKS

GENERAL AND SPECIFIC SPECIFICATIONS

NUMBERED TO CORRESPOND TO YOUR REQUEST

"ATTACHMENT"

1) New 1986 or 1987 GMC Brigadier Model J8C064
2) Wheel Base 169" with 102" CT
3) G.V.W.R. - 48,000 lbs.
4) Front Axle - 18,000 lbs. (Rockwell FL941); Rear Axle - 34,000 lbs. (Rockwell SL100)
5) Dual 12 Volt - 1250 CCA Mounted On The Frame
6) Brakes - Per Bid Request
7) Alternator 12 Volt - 80 Amp Delco; Exception
8) Cab As Requested, Except Hood Description Does Not Include Steel Reinforcing
9) Tinted Glass
10) All Controls And Instruments Requested Are Included In Our Bid
11) Engine: 3208 Cat at 210 H.P. and 500 Ft. Lbs. of Torque. Naturally Aspirated With Block Heater In Excess Of Request.
12) Exhaust - Horizontal
13) Air Cleaner - Single Element Heavy Duty
14) Starter - 12 Volt Delco (Exception)
14) Frame - 10 5/8 x 3¼ x 5/16" With Full "¼" Channell Straight Thru Full Depth With 24" Extension. SM 22.4 and R.B.M. 2,500,000 Inch Lbs. - Exception
16) Bumper - Heavy Duty
17) Dual Step 50 Gallon tanks
18) Heater/Defroster - Per Bid Request
19) Horns - Per Bid Request
20) Lights - Per Request
21) Mirrors - 7" x 16" West Coast Heated With 5" Spots
22) Rustproofing By "Z" Bart
23) Suspension 18,000 Lbs. - Front and Hendrickson U340 On Rear
24) Radiator and Silicon Hoses Per Bid Request
25) Seats - Bostrom Air Ride Passenger and Stationary Passenger
26) Steering - Dual Shepard Gears With Adjustable Steering Wheel 2
27) Tires - Front 12R22.5 Radial (Necessary To Get Front Brake Size) Rear 11R22.5 Radial With Traction Block Tread
28) Transmission - Allison MT653 With External Cooler and Spin On Filter In The Line
29) Manual - Per Bid Request
30) Wheels - Cast Spoke Wheel With (11) 8.25 x 22.5 Rims and Stemco Front Seals
31) Wipers - Per Bid Request
32) Color - Per Bid Request
33 - 34) Per Bid Request Supplied By Hoosier Truck Equipment With No Exceptions (See Enclosure)
35) Warranty - Item's Enclosed

34. Dump Body/Hoist for Tandem Truck:

Ten (10) cubic yard capacity with (Truck CT 96").
- A) 12 foot in length
- B) 7 foot in width
- C) 39 inch sides
- D) 45 inch front and tailgate

Body - Floor shall be 8 gauge steel, sides front, and cab shield shall be 10 gauge steel. Body will have boxed top rail, full corners, and 6" side braces both vertical and horizontal. Cab shield shall be reinforced and cover half the cab. Gussets will be added to accept side boards 2" X 8". Four inch structural channel cross members and structural channel longitudinals to suit the hoist. All welds will be continuous. Tarpulin tie bar shall be 3/4" minimum. All friction points are to be Alemite-Zerk fittings.

Tailgate - Double acting fully boxed 6 panel 8 gauge steel with heavy duty hardware.

Hoist - Minimum 24 ton capacity front mounted telescopic with chrome rod to be operated through central hydraulic system. Head shall be bolt or screw type.

Mud Flaps - Installed in front and rear of wheels.

Lights - To meet State and Federal requirements and specifications.

Painting - All metal shall be chemically cleaned before being primed. Units shall be polyamide Zinochromate and finish shall be Utility Blue in polyurethane enamel.

Bed shall be undercoated.

35. Warranty: Give description of all warranties and component warranties available.

* * * * *

Mostly minor Exceptions

Check if AS SPECIFIED:

1. ✓	9. ✓	17. ✓	25. ✓	33. ____
2. ____	10. ✓	18. ✓	26. ____	34. ✓
3. ____	11. ____	19. ✓	27. ____	35. ✓
4. ____	12. ✓	20. ✓	28. ✓	
5. ✓	13. ____	21. ____	29. ✓	
6. ✓	14. ____	22. ✓	30. ____	
7. ____	15. ____	23. ____	31. ✓	
8. ____	16. ✓	24. ____	32. ✓	

Total price for unit:

$49,099.00

Rugged, light weight medium duty bodies for greatest legal payload on tandem axle trucks

HEIL

MODEL HPT

BODIES FOR HIGH PRESSURE TELESCOPIC HOISTS

VOLUME 8 yd³ (6.12 m³) AND UP

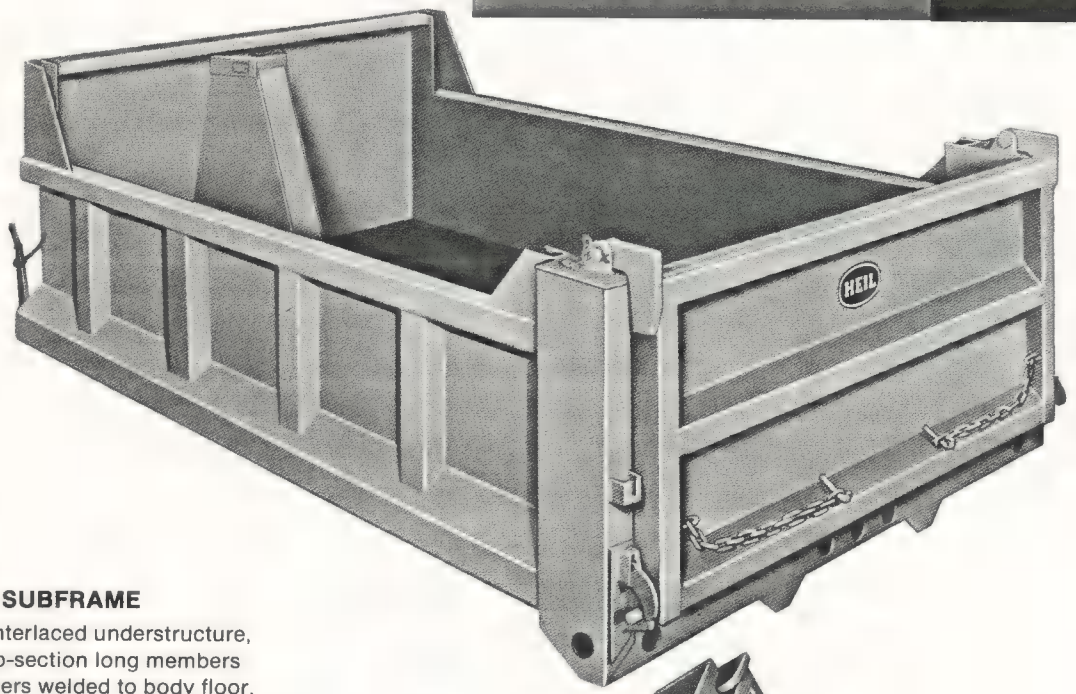

HEAVY DUTY SUBFRAME

Heil fabricated interlaced understructure, with sturdy, deep-section long members and cross-members welded to body floor. This rugged construction virtually eliminates distortion and floor-sag. Smooth body floor assures clean, faster dumps.

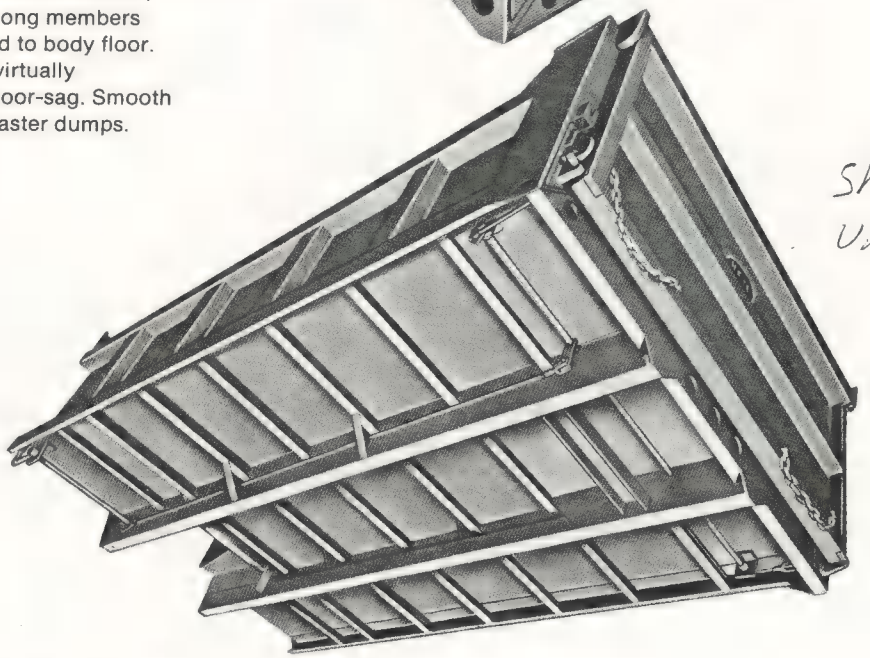

Shows Base Unit only

FEATURES:

1. Rigid long members.
2. Interlaced understructure.
3. All hi-tensile steel construction.
4. Boxed vertical side braces.
5. Wide, fully-boxed top rail. Keeps sides straight.
6. Full-depth rear corner posts.
7. Box-member reinforced tailgate, with horizontal brace.
8. Body is full welded.
9. Smaller well for hoist cylinder prevents hanging up of material. Hoist housing reinforces front head.
10. Standard pockets for extension sideboards.
11. Strong tailgate chains furnished as standard.
12. Chain brackets designed for easy, fast hookup.
13. Provision made for lights per Federal Standard 108.
14. Optional long chains available to make tailgate double acting.

HPT-53 AND HPT-63 TELESCOPIC HOISTS

★ LESS WEIGHT!
★ REDUCED MOUNTING HEIGHT!
★ FASTER CYCLE TIME!
★ TROUBLE-FREE INSTALLATION!

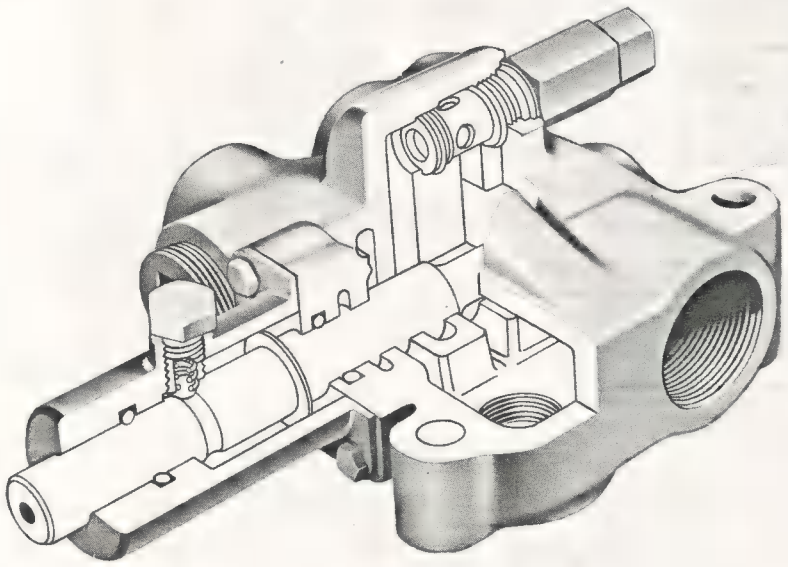

Control valve with check valve and cartridge type differential piston relief valve. Feathered valve spool and a spring loaded stop control lowering speed. Cable pull out, provided as standard equipment.

The company reserves the right under its product improvement policy to change construction or design details and furnish equipment when so altered without reference to illustrations or specifications used herein.

CAPACITY CHART

	Body Length	Overhang	Hoist Model	* Weight	Dump Angle	Body & Payload
HPT-53 SERIES	11′-0″	6″	53-100	765#	52½°	20.0
	11′-0″	12″	53-100	765#	55½°	22.5
	11′-6″	6″	53-100	765#	49½°	19.0
	11′-6″	12″	53-100	765#	52½°	21.5
	12′-0″	12″	53-100	765#	49½°	20.5
	12′-0″	18″	53-100	765#	52½°	23.0
	12′-0″	6″	53-110	790#	52°	20.0
	12′-0″	12″	53-110	790#	55°	22.5
	12′-6″	6″	53-110	790#	49¾°	19.5
	12′-6″	12″	53-110	790#	52°	21.0
	13′-0″	6″	53-120	820#	52°	19.5
	13′-0″	12″	53-120	820#	54¾°	21.0
	14′-0″	12″	53-120	820#	50°	19.5
	14′-0″	18″	53-120	820#	52°	21.5
	15′-0″	12″	53-130	845#	49¾°	19.5
	15′-0″	18″	53-130	845#	51½°	21.5
HPT-63 SERIES	13′-0″	6″	63-120	1105#	52°	31.5
	13′-0″	12″	63-120	1105#	54¾°	34.5
	14′-0″	12″	63-120	1105#	50°	32.0
	14′-0″	18″	63-120	1105#	52°	35.0
	15′-0″	12″	63-130	1140#	49¾°	32.5
	15′-0″	18″	63-130	1140#	51½°	35.0
	16′-0″	12″	63-140	1185#	49½°	32.0
	16′-0″	18″	63-140	1185#	52°	34.0
	18′-0″	12″	63-160	1245#	49¾°	31.5
	18′-0″	18″	63-160	1245#	51½°	33.5
	19′-0″	12″	63-160	1245#	46½°	29.5
	19′-0″	18″	63-160	1245#	48°	31.5

* Hoist weight less oil and PTO.

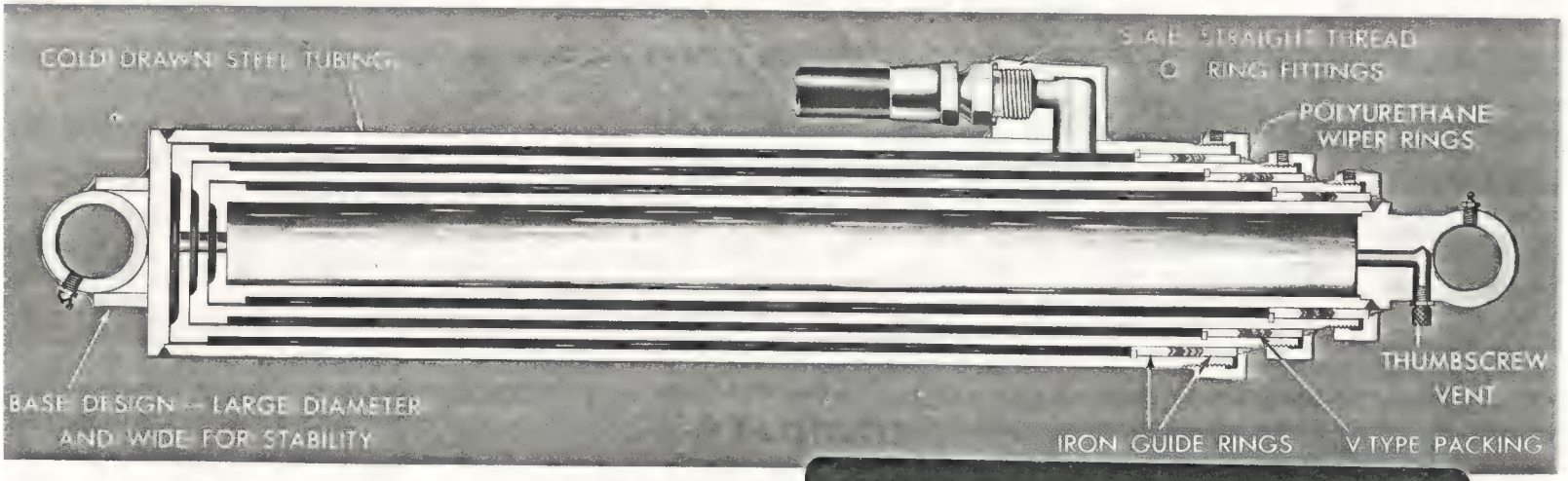

HEIL

THE HEIL CO

FACTORIES: MILWAUKEE, W
SALES OFFICES: ALBANY,
ATLANTA, GEORGIA; CLEVELA
KANSAS CITY, MISSOU
SEATTLE, WA
TORON

CABLE ADDRESS: HEILCO

Bulletin BH-71612-573 10M ZP

Hoosier TRUCK EQUIPMENT, INC.
Distributors of Quality Truck Equipment
5733 U.S. 30 East / Fort Wayne, Indiana 46803 / (219) 493-2581

Bid Reference #787

1 - Heil HPT 10 yd. 12' x 7' dump body with HPT 53-110 hoist
8 ga. floor, sides and front
Boxed top rail and full corners
6" side braces verticle and horizontal
1/2 cab shield reinforced
4" structural channel crossmembers and long members
Tarp tie bar 3/4" min.
DA full boxed 6 panel 8 ga. tailgate

Installed and painted per specifications — ~~$ 4,917.00~~ Included

Central Hydraulics — ~~$ 2,625.00~~

Heil Warrenty is 12 months on Materials and Workmanship! Not Warrentied Agains Abuse!

8000 BRIGADIER CAB FEATURES

BACK PANEL	Panel is a continuous piece extending from one door opening to the other. Vertical depressions add strength to rear sheet metal and reduce panel drumming.
BUMPER	Bumper is three piece with steel center section and flexible end caps. Bumper fasteners are coated with M-Guard and painted Argent silver. Bumper is not available in other colors.
DOORS	Steel construction with strap type hinge. Locks on R.H. and L.H. doors. Inside panel coated with tectyl, a rust resistant, wax like compound. Hem flange is sealed with plastisol, a soft, pliable, caulking type compound that keeps out moisture. Strengthened cab door opens to 70°.
HOOD/FENDERS	Easily removable separate components. Made of fiberglass. Inner fenders are connected to the cab, radiator, and fenders. Hood and fenders tilt forward 90° for impressive engine accessibility. Hood is mounted at the front on its own heavy steel cross support. Hood latches are constructed of molded nylon and incorporate a sturdy rubber connector, corrosion-free latch. Hood rests on rubber "V" blocks at the cowl.
FLOOR	Panels are welded to cab rear cross sill and lower portion of side door frame to form a continuously boxed section in the shape of a horizontal "U". Includes 1" polyurethane foam insulation.
GAGES	Speedometer (MPH/KPH), odometer, tachometer with integral hourmeter (reads rpm - average hours only), oil pressure, fuel, water temperature, air pressure, low air alarm buzzer, wheel lock test circuit light, and voltmeter. Low oil pressure and high water temperature buzzer and lights.
GRILLE	Plastic corrosion-resistant insert with a stainless steel bright grille trim. Grille is mounted to the radiator frame and remains stationary when the hood is tilted forward.
HANDLES	Anodized aluminum cab assist both sides.
HEATER	Deluxe Air Flow includes defroster.
HORN	Single electric.
INTERIOR	Soft vinyl headliner. Right-hand fuse block cover that provides access to fuse block, upper vinyl door trim panels with pull straps and coat hook located on R.H. rear cab back panel and R.H. and L.H. arm rests. Trim color available in multi-tone gray only.
LIGHTS	Warning lights for turn signal, high beam and differential lockout. Warning light and buzzer for low air pressure and low water. Dual front combination double faced turn signals with side marker lights including side amber reflex reflectors. Dual combination stop-tail and turn signal lights incorporating backup lights and reflex reflectors. Rear license plate light and bracket on left hand lamp. Five amber front roof marker and identification lights with separate switch and turn signal switch. Emergency disability flasher system, instrument lights, dome lamp, dual headlamps and shock mounted rear lamps.
MIRRORS	Dual 6" x 16" galvanized for corrosion protection.
ROOF	Back panel and roof are lap jointed together for improved sealing and increased strength. Drain gutters are an integral part of the roof panel, stopping the possibility of joint leaks. Includes 1" polyurethane foam insulation on roof and roof trim pad.
STEERING	Black finish, 21" steering wheel with eliptical rim. Chromed tilt steering lock handle (controls the steering column angle). Column tilts 12° and provides a maximum 64° flat wheel position for easy handling in close quarters.
SUNVISORS	Left and right-hand sunvisors.

WARRANTY COVERAGE AT A GLANCE

The warranty coverage on your vehicle varies as illustated below. Please read pages 4 thru 11 for complete details.

Vehicle Coverage	Warranty Limitations (Whichever Comes First) *		Percent of Dealer's Repair Charge Paid By Owner	
	Time	Vehicle Miles	Parts	Labor
Entire Vehicle (Except tires)	0-12 Months	0-50,000	No Charge	No Charge
Air Conditioning	0-12 Months	0-100,000	No Charge	No Charge
• Transmission • Drive Axles • Propeller Shaft • Rear Axle Housing • Front Axle I-Beam • Crossmembers • GM Fluid Fan (Housing and all internal parts)	0-12 Months	0-50,000	No Charge	No Charge
	12-24 Months	50,001-150,000	50%	50%
Frame Rails	0-12 Months	0-50,000	No Charge	No Charge
	12-60 Months	50,001-Unlimited	50%	50%
Diesel Engine Optional Equipment	0-24 Months	0-50,000	No Charge	No Charge
Corrosion	0-36 Months	Unlimited	No Charge	No Charge

*The warranty coverages are determined by the mileage of the vehicle and the number of months from the delivery date. The warranty coverages are limited by whichever comes first.

Caterpillar Warranty

ENGINES USED TO POWER ON-HIGHWAY VEHICLES

This warranty applies to the following products delivered to the first user on or after April 1, 1980.

Caterpillar warrants new engines sold by it and used to power on-highway vehicles (except engines sold for use in the United States of America in personal or family pleasure vehicle applications, to which different warranties apply) to be free from defects in material and workmanship, subject to the following provisions.

Warranty Period

The base warranty period is 100,000 miles (160,000 kilometers), 3600 operating hours, or 24 months, whichever occurs first after date of delivery to the first user.

An extended warranty period also applies to the cylinder block, crankshaft and connecting rods in 3300 and 3400 Series Engines. These parts are warranted up to 300,000 miles (480,000 kilometers), 10,800 operating hours or 36 months, whichever occurs first after date of delivery to the first user.

Caterpillar Responsibilities

If a defect in material or workmanship is found during the warranty period, Caterpillar will provide at a Caterpillar dealer or other source approved by Caterpillar:

During the base warranty period:

- New or repaired parts at Caterpillar's choice.
- Labor needed to make the repair during normal working hours including reasonable labor to remove and reinstall the product if necessary, except that on 3200 Series Engines such labor will be provided as follows:

Period of Service				
Miles*	Kilometers*	Hours*	Months*	Labor
0-50,000	0-80,000	0-1800	24	100%
~~50,001-100,000~~	~~80,001-160,000~~	~~1801-3600~~	~~24~~	~~50%~~

*Whichever occurs first.

- Usual and customary parts shipping charges to the approved source.
- Lubricating oil, filters, antifreeze and other service items made unusable by the warranty failure.

During the extended warranty period (3300 and 3400 Series Engines only):

- New or repaired (at Caterpillar's choice) cylinder block, crankshaft, and connecting rods damaged by a failure caused by a defect in one of these parts.

User Responsibilities

User is responsible for:

- Labor not provided by Caterpillar.
- Premium or overtime labor costs unless essential to prevent loss to perishable goods.
- Parts shipping charges in excess of those which are usual and customary.
- Costs for investigating performance complaints unless the problem is caused by a defect in Caterpillar material or workmanship.
- Giving timely notice of a warrantable failure and promptly making the product available for repair.

During the extended warranty period (3300 and 3400 Series Engines only):

- All costs except for the cylinder block, crankshaft or connecting rods as explained under CATERPILLAR RESPONSIBILITIES.

Limitations

Caterpillar is not responsible for failures resulting from:

- Any application or installation which Caterpillar judges improper.
- Attachments, accessory items and parts not sold or approved by Caterpillar.
- Abuse, neglect or improper repair.
- User's unreasonable delay in making product available after notice for product improvements authorized by Caterpillar.

This warranty is expressly in lieu of any other warranties, express or implied, including any warranty of merchantability or fitness for a particular purpose, except Caterpillar emission related components warranties where applicable. Remedies under this warranty are limited to the provision of material and services, as specified above. Caterpillar is not responsible for incidental or consequential damages.

As used in this warranty the term "Caterpillar" means Caterpillar Tractor Co. or one of its subsidiaries whichever last sold the product involved.

Detroit Diesel Allison
Division of General Motors Corporation
Indianapolis, In. 46206-0894

NEW PRODUCT WARRANTY

DISTRIBUTOR SALES

WARRANTY ON NEW MODEL AT, MT AND HT SERIES ALLISON AUTOMATIC TRANSMISSIONS USED IN ON-HIGHWAY BUS AND LINE HAUL APPLICATIONS

Detroit Diesel Allison (Detroit Diesel Allison Division, General Motors Corporation) warrants to the owner of each new AT, MT and HT Series Allison Transmission installed in an on-highway bus or line haul motor vehicle that it will repair any defective or malfunctioning part of the transmission in accordance with the following schedule:

WARRANTY LIMITATIONS AND ADJUSTMENT SCHEDULE			
Warranty Limitations (Whichever First Occurs)		Adjustment Charge To Be Paid By Owner	
Months	Transmission Miles	Parts	Labor
0 - 12	0 - 50,000 M (0 - 80,000 km)	No Charge	No Charge
13 - 15	50,001 - 62,500 M (80,001 - 100,000 km)	20%*	20%*
16 - 18	62,501 - 75,000 M (100,001 - 120,000 km)	40%*	40%*
19 - 21	75,001 - 87,500 M (120,001 - 140,000 km)	60%*	60%*
22 - 24	87,501 - 100,000 M (140,001 - 160,000 km)	80%*	80%*

*% of Service Outlet's Normal Charge

The warranty period shall begin on the date the transmission is delivered to the first retail purchaser or, if the transmission is first placed in service as a demonstrator prior to sale at retail, on the date the transmission is first placed in such service.

This warranty covers only malfunctions resulting from defects in material or workmanship.

This warranty does not cover:

- Malfunctions resulting from misuse, negligence, alterations, accident or lack of performance of normal maintenance services;
- Any transmission which shall have been repaired by other than an authorized Detroit Diesel Allison service outlet so as in any way, in the judgment of Detroit Diesel Allison, to affect adversely its performance and reliability;
- The replacement of maintenance items (such as filters, screens, transmission fluid) made in connection with normal maintenance services;
- Loss of time, inconvenience, loss of use of the vehicle or other consequential damages.

The owner is responsible for the performance of regular maintenance services as specified in the driver's handbook applicable to the transmission.

Repairs qualifying under this warranty will be performed by any Detroit Diesel Allison Distributor or *his specifically designated Service Dealer* within a reasonable time.

This warranty is the only warranty applicable to the Allison Model AT, MT and HT Series Automatic Transmissions used in on-highway bus and line haul applications and is expressly in lieu of any other warranties, expressed or implied, including any implied warranty of merchantability or fitness for a particular purpose. Detroit Diesel Allison neither assumes nor authorizes any other person to assume for it any other liability in connection with such transmissions.

F-17SE175(6-82)

THE ROCKWELL WARRANTY

Rockwell International Corporation ("Rockwell") warrants to the owner for use (the "Owner") that the Rockwell components listed below which have been installed by an original equipment manufacturer as original equipment in an on-highway vehicle will be free from defects in material and workmanship. For components other than oil seals, this warranty covers failures occurring after the date the manufacturer's vehicle warranty (including any prorated coverage) applicable to such components expires, to the end of five years from the date of purchase by the first Owner, or 500,000 miles/800,000 km of use, whichever comes first. Oil seals on rear axles are covered for three years from the date of purchase by the first Owner, or 300,000 miles/480,000 km of use, whichever comes first. Components installed as replacements under this warranty are warranted only for the remainder of the period covered by this warranty.

This warranty does not cover a component which fails, malfunctions, or is damaged as a result of (i) improper modification or repair, (ii) accident, abuse or improper use (including loading beyond the specified maximum vehicle weight), (iii) improper or insufficient maintenance, or (iv) normal wear and tear. It does not apply to components not manufactured or supplied by Rockwell, to components of vehicles used in off-highway applications, or to components of vehicles operated outside the United States and Canada.

THIS WARRANTY IS EXPRESSLY IN LIEU OF ALL OTHER WARRANTIES OR CONDITIONS, EXPRESS, IMPLIED OR STATUTORY, INCLUDING ANY IMPLIED WARRANTY OF MERCHANTABILITY OR FITNESS FOR PARTICULAR PURPOSE.

In no event shall Rockwell be liable for special, incidental, indirect or consequential damages of any kind, including but not limited to, labor and towing charges.

The exclusive remedy under this warranty shall be repair or replacement of the defective component at Rockwell's option. This is the entire agreement between Rockwell and the Owner about warranty and no Rockwell employee or dealer is authorized to make any additional warranty on behalf of Rockwell.

The first Owner must return the registration certificate delivered with the vehicle to Rockwell within 30 days after delivery to get coverage under this warranty. This warranty may be transferred by sending the new Owner's name and address to Rockwell at the address on the registration certificate.

To obtain service under this warranty, the vehicle may be taken to any participating new truck/trailer dealer. The participating dealer will inspect the vehicle and contact Rockwell for an evaluation of the failure. When authorized by Rockwell, he will repair or replace during the term of this warranty any defective Rockwell component covered by this warranty. The Owner is responsible for any labor charges made by the dealer.

Covered Components

Rockwell Front Axle Models FD-931, FF-941, FF-942, FG-941 and FL-941 (coverage excludes wheel end equipment, wheel seals and tie rods).

Rockwell Single Rear Axle Model R-170 (coverage excludes wheel end equipment, wheel seals and gaskets).

Rockwell Tandem Rear Axle Models SL-100, SQ-100, SL-100P, SQ-100P, SQR-100, SQR-100P and SSHD (coverage excludes wheel end equipment, wheel seals, gaskets and oil filters).

Rockwell Trailer Axles–TK, TN, TP, TQ, TR and RQ Series (coverage excludes wheel end equipment and wheel seals).

Rockwell Cam-Master® Brakes–"P®" "T™" and "Q™" Series (coverage limited to brackets, spiders and camshafts).

Rockwell Dura-Master® Air Disc Brakes (coverage limited to torque plate, caliper [except bushings and boot] and chamber bracket).

Rockwell PayMaster™ Automatic Slack Adjusters.

FOR ADDITIONAL DETAILS ON THE ROCKWELL 5-YEAR/500,000-MILE WARRANTY, CALL ROCKWELL–1-800-535-5560.

Rockwell International

...where science gets down to business

Aerospace / Electronics / Automotive
General Industries / A-B Industrial Automation

SP 8559

Copyright Rockwell International 1985

Litho in U.S.A.

2.
(Front Page)

CITY OF FORT WAYNE

DEPARTMENT OF PURCHASING
ONE MAIN STREET - ROOM 940
FORT WAYNE, INDIANA 46802

BID REFERENCE # 787

DATE April 28, 1986

DUE DATE Tuesday, May 20, 1986 at 11:15 A.M.

Department receiving bid items City Utilities Garage
1705 S. Lafayette Street
Fort Wayne, IN 46803

Bid Bond Required NO ____ YES X AMOUNT 5%

Performance Bond Required NO X YES ____ AMOUNT _____

Affirmative Action ON FILE _____ ATTACHED_____

Prompt payment discounts will be allowed as follows: None %
if paid within _____ days.

The City of Fort Wayne is exempt from Federal excise and Indiana State Sale Tax. The City's Indiana Sales Tax Exemption Certificate number is 356-001-255 0013, prices should not include these taxes.

The execution hereof by the bidder is acceptance of all terms and conditions herein and in that regard the bidder agrees to be bound by same and be bound to the amount of his/her bid for a period of sixty (60) days.

Lincolnway Int'l Trucks, Inc.
Name of Company

by R.E. Barkley Agent
(signature)

Address 2807 Goshen Rd.

City Fort Wayne, IN 46808

FORT WAYNE WHERE AMERICA WORKS

General Bid Form
Form Prescribed by State Board of Accounts
D. H. Goble Co., Greenfield, Indiana

Revised Form No. 95 (1964)

BID, OFFER OR PROPOSAL

on

MATERIAL OR MATERIALS, EQUIPMENT, GOODS OR SUPPLIES

Ft. Wayne, Indiana May 20, 19 86.

To Carol Offerle, Director of Purchases, City of Ft. Wayne, Ind.
State name official position and municipality

Pursuant to notices given, the undersigned proposes to furnish the material or materials, equipment, goods or supplies as per said notices and specifications now on file in the office of

Department of Purchasing, City of Fort Wayne
state name official position and municipality

and as per copy thereof, hereto attached, or as described herein for the following amounts:

(State the class or item number or an exact description of the material or materials, equipment, goods or supplies to be furnished and amount of bid on each article.)

Class or Item	Quantity	Unit	Quality — Description	Unit Price	Amount
	One		1986 International S F1954 Cab and chassis per specifications in Bid - Reference #787		
			Base Chassis Price		$40,135.00
			Body & Hydraulics furnished by Deeds Equipment (including additional freight) . . . $6917.00		
			Total w/ Deeds Equipment		$47,052.00
			Option: Body & Hydraulics furnished by Hoosier Truck Equipment . .$6975.00		
			Total w/ Hoosier Truck Equipment		$47,110.00
			Option: Body & Hydraulics furnished by Ernst Truck Equipment . .$8003.80		
			Total w/ Ernst Truck Equipment		$48,138.80

IF MORE SPACE IS NEEDED—ATTACH SEPARATE SHEET

34. Dump Body/Hoist for Tandem Truck:

Ten (10) cubic yard capacity with (Truck CT 96").

A) 12 foot in length
B) 7 foot in width
C) 39 inch sides
D) 45 inch front and tailgate

Body - Floor shall be 8 gauge steel, sides front, and cab shield shall be 10 gauge steel. Body will have boxed top rail, full corners, and 6" side braces both vertical and horizontal. Cab shield shall be reinforced and cover half the cab. Gussets will be added to accept side boards 2" X 8". Four inch structural channel cross members and structural channel longitudinals to suit the hoist. All welds will be continuous. Tarpulin tie bar shall be 3/4" minimum. All friction points are to be Alemite-Zerk fittings.

Tailgate - Double acting fully boxed 6 panel 8 gauge steel with heavy duty hardware.

Hoist - Minimum 24 ton capacity front mounted telescopic with chrome rod to be operated through central hydraulic system. Head shall be bolt or screw type.

Mud Flaps - Installed in front and rear of wheels.

Lights - To meet State and Federal requirements and specifications.

Painting - All metal shall be chemically cleaned before being primed. Units shall be polyamide Zinochromate and finish shall be Utility Blue in polyurethane enamel.

Bed shall be undercoated.

35. Warranty: Give description of all warranties and component warranties available.

* * * * *

150 Day Delivery

Check if AS SPECIFIED:

1. ✓	9. ✓	17. ✓	25. ✓	33. ✓
2. ✓	10. ✓	18. ✓	26. ✓	34. ✓
3. ✓	11. ✓	19. ✓	27. ✓	35. ✓
4. ✓	12. ✓	20. ✓	28. ✓	
5. ✓	13. ✓	21. ✓	29. ✓	
6. ✓	14. ✓	22. ✓	30. ✓	
7. ✓	15. ✓	23. ✓	31. ✓	
8. ✓	16. ✓	24. ✓	32. ✓	

Total price for unit:

$ 47,052.00

DEEDS EQUIPMENT COMPANY, INC.

CONSTRUCTION, MUNICIPAL, ROAD, & UTILITY EQUIPMENT

May 15, 1986

Lincolnway International
333 S. Clinton Ave.
P.O. Box 10270
Fort Wayne, IN 46806

Mr. Dick Barkley:

Thank you for the opportunity to quote you on the equipment for Fort Wayne, reference # 787.

One (1) Galion, model 502F, 12' dump body, 10-12 yard, 10 gauge, 8 gauge floor and tailgate, tailgate double-acting, Galion, model FD6392 hoist with chrome rod, one-half cab shield, mud flaps and lights to meet all City specifications, and painted to meet all City specifications.

One (1) Deeds central hydraulic system to meet all City specifications.

Price, FOB Ft. Wayne, each.....$6,827.00

If you should have any questions concerning this quote, please feel free to call. Thank you.

Dan Brennan

Dan Brennan

Deeds Equipment Co.,Inc.

DB/to

OFFICE: 8015 E. 45TH STREET • INDIANAPOLIS, IN 46226 • PHONE: (317) 545-3331
BRANCH: R.R. 2 • PLYMOUTH, IN 46563 • PHONE: (219) 784-2500

Grayarc
P.O. Box 2944
Hartford, CT 06104
CALL TOLL FREE: 1-800-243-5250

REPLY MESSAGE
Fold At (▲) To Fit Grayarc Window Envelope # EW10P

REORDER ITEM # F270

TO

Option
Ernst Truck Eqp

Bid 787

FROM 1 - Unit
ERNST TRUCK EQUIPMENT
2727 McDonald St.
FORT WAYNE, INDIANA 46803
(219) 424-1590

SUBJECT: 244 Perf

List DATE: 5-14-84

FOLD ▲

7 X 12 - 39" w/45" ends 10 yd 10 Ga.	2875.00	List	6610.00
8 Ga Floor	185.00		
Box Top Rail	105.00	Ernst Cost Fact	
Vert & Horz Side Braces	499.00		$3833.00
Tie Rail	108.00	Frt	125.00
Full Rear Corners	185.00	Profit	400.00
Continuous Weld (except floor to members)	96.00	Steps	125.00
8 Ga 4 Panel Tailgate	81.00	Paint	400.00
24 Ton Frt tel chrome cyl 63105	2874.00	Mtg	650.00
less Hyd.	-(633.00)	Std Lights	175.00
1/2 cab	251.00		5708.00
	$6610.00	Undercoat	100.00
			$5808.00

PLEASE REPLY TO

SIGNED K. McCrash-Mgr.

REPLY

Central Hyd as per Bid w/ eqt + parts needed as per spec's JIC + Flow control divider etc. $2195.00

~~100 Gal Fuel Tank behind cab w/ ... Unit brackets $...~~

DATE: ~~... 18" clearance for ... tank~~ SIGNED

Dual Steps

Item # F270 © Wheeler Group Inc. 1978

THIS COPY FOR PERSON ADDRESSED

REORDER ITEM # F270
REPLY MESSAGE
Fold At (▲) To Fit Grayarc Window Envelope # EW10P
Grayarc
P.O. Box 2944
Hartford, CT 06104
CALL TOLL FREE: 1-800-243-5250

7336

DIGEST SHEET

TITLE OF ORDINANCE: SPECIAL

DEPARTMENT REQUESTING ORDINANCE: PURCHASING

S-86-07-06

SYNOPSIS OF ORDINANCE:

An ordinance approving City Utilities Purchase order #A-53692 with respect to the purchase of a 1986 Tandem Axle Cab & Chassis. Per the specifications in reference #787 for the City Utilities Garage.

This purchase order is "Subject to financing through the City Equipment Lease program as provided for in Ordinance S-174-84."

EFFECT OF PASSAGE:

Purchase is necessary for maintaining current and projected City Services; Modernization of rolling stock.

EFFECT OF NON-PASSAGE:

Department will be unable to maintain current levels of City services; continuation of high maintenance cost to keep older rolling stock in operation.

MONEY INVOLVED (Direct costs, Expenditures, Savings):

Lincolnway International #A-53692 $47,052.00

ASSIGNED TO COMMITTE (President):

one of 2

BILL NO. S-86-07-06

REPORT OF THE COMMITTEE ON CITY UTILITIES

WE, YOUR COMMITTEE ON CITY UTILITIES TO WHOM WAS REFERRED AN (ORDINANCE) (~~RESOLUTION~~) approving City Utilities Purchase Order #A-53692 by the City of Fort Wayne, Indiana, by and through its Department of Purchasing and Lincolnway International Trucks, Inc., for the City Utilities Garage

HAVE HAD SAID (ORDINANCE) (~~RESOLUTION~~) UNDER CONSIDERATION AND BEG LEAVE TO REPORT BACK TO THE COMMON COUNCIL THAT SAID (ORDINANCE) (~~RESOLUTION~~)

YES		NO
	PAUL M. BURNS CHAIRMAN	
	THOMAS C. HENRY VICE CHAIRMAN	
	BEN A. EISBART	
	JAMES S. STIER	
	MARK E. GiaQUINTA	

CONCURRED IN 7-22-86

SANDRA E. KENNEDY
CITY CLERK